Non-contact liquid level sensor instruction manual
(Special series products for small tube liquid level sensor)
PRO RANGE -Y27C-PUB

content

1st. Overview 2

2nd. Scope of application 2

3rd. Technical Parameters 2

4th. Wiring diagram 3

4. 1. Wiring diagram of PRO RANGE-Y27C-Dx-V 3

4.2. Wiring diagram of PRO RANGE-Y27C-Dx-NPN 4

5th. Product selection 5

6th. Structure description 5

7th. Installation method 6

8th. Instructions method 6

9th.Sensitivity setting steps 6

10th. Physical shape map 7

11th. Installation diagram 7

12th. Dimensions related to each model product 8

13th.Precautions 8

14th.Product warranty terms and instructions 9

15th. Manual version 10

1st. Overview

The intelligent non-contact small tube liquid level sensor (hereinafter referred to as the small tube sensor) adopts advanced signal processing technology and high-speed signal processing chip, which is specially designed for the liquid level detection needs of infusion tubes and industrial small tubes. The intelligent non-contact small tube liquid level sensor can output high and low level signals at the same time, which can meet the needs of various occasions.

The intelligent non-contact small tube liquid level sensor uses the sensing capacitance of water to detect whether there is liquid. When there is no liquid approaching the sensor, the sensor has a certain static capacitance to the ground due to the existence of distributed capacitance. , when the liquid level slowly rises and approaches the sensor, the parasitic capacitance of the liquid will be coupled to this static capacitance, making the capacitance value of the sensor larger, and the changed capacitance signal is then input to the control IC for signal conversion, which will change the capacitance is converted into the change of a certain electrical signal, and then a certain algorithm is used to detect and judge the degree of this change. When the change exceeds a certain threshold, it is considered that the liquid level reachesthe sensing point.

2nd. Scope of application

It is specialized in small tube application industries, such as medical equipment, medical infusion, biological liquid detection, scientific research and teaching equipment, intelligent coffee machine, intelligent water dispenser, intelligent electrical appliances, industrial small tube liquid level detection, etc.

3rd. Technical Parameters

Project name	Parameter				
Product number	PRO RANGE-Y27C-D3(D4 D6 D8 D10)-PUB				
Current consumption	3.5mA				
Input voltage (Vin)	5~24(V)				
Output method	High and low level，NPN				
Output current	≤100mA				
Response time	500mS				
Working temperature	-20~85℃				
Conduit Dimensions (Outer diameter)	D3=3mm	D4=4mm	D6=6mm	D8=8mm	D10=10mm
Humidity	5%~80% (no frosting)				
Water resistant	IP67				
Material	PC V0 fireproof material				
Safety standard certification	CE				
Environmental certification	ROHS-2.0				

4th. Wiring diagram of various models

4. 1 Wiring diagram of PRO RANGE-Y27C-Dx-V

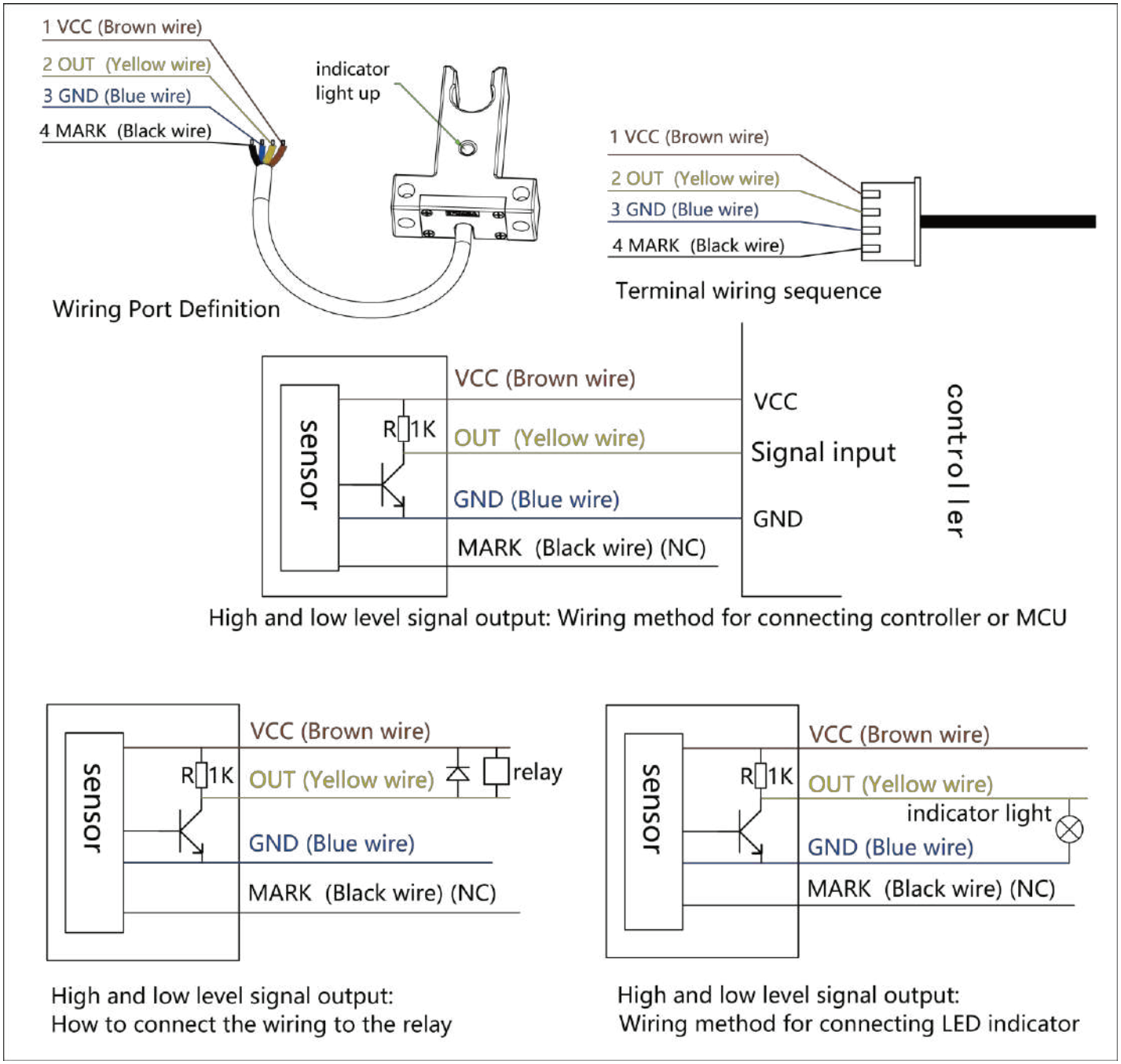

High and low level output drive small relay (coil current ≤ 100mA) working principle:

When the liquid is sensed, the transistor will cut off and output a high level, and the relay will not pull in when it is powered off;

When no liquid is sensed, the transistor is turned on and outputs a low level, and the relay is energized and pulled in Simplified schematic diagram of NPN output wiring principle.

4.2 Wiring diagram of PRO RANGE-Y27C-Dx-NPN

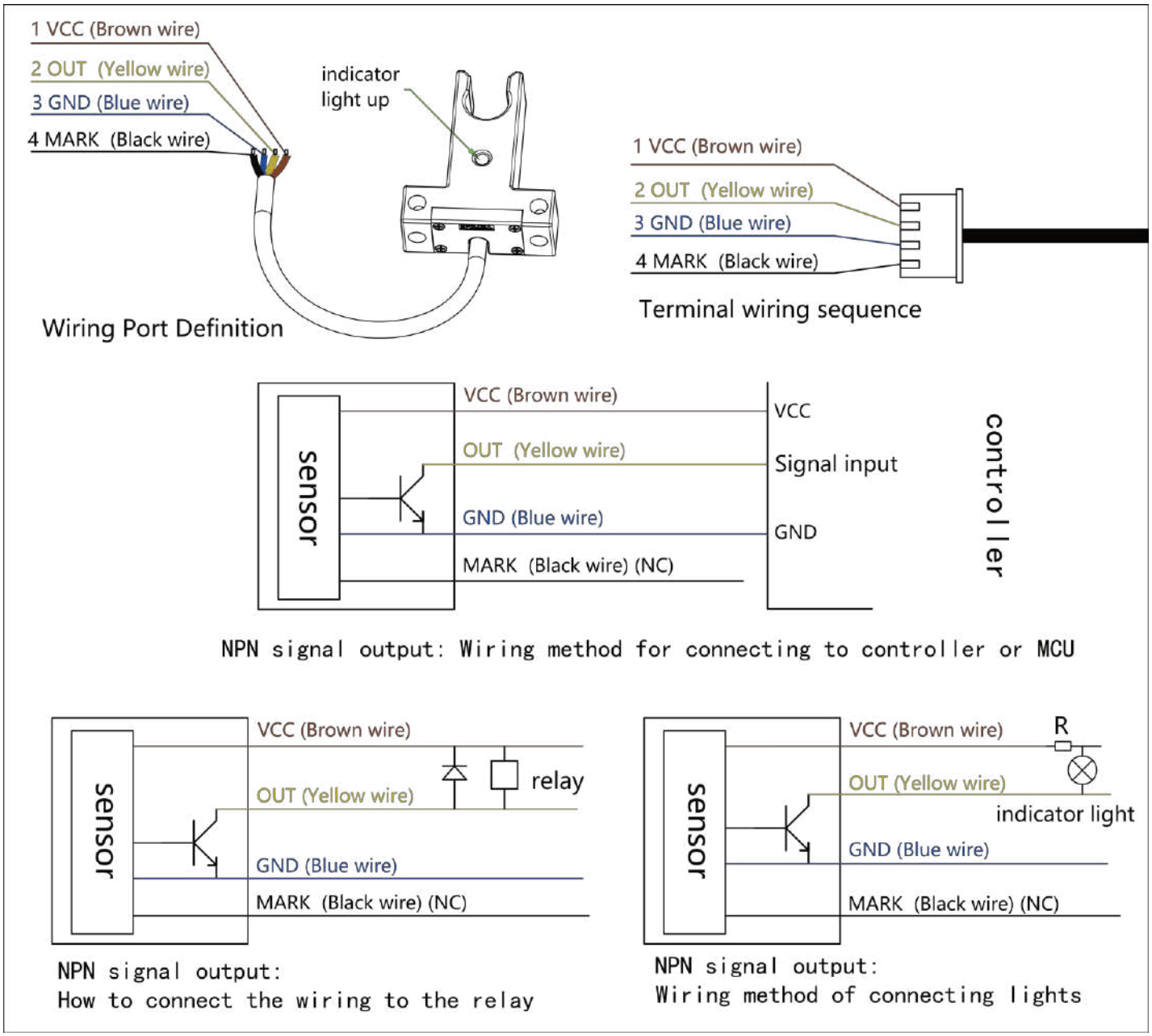

NPN output drives small relays (coil current≤100mA) working principle:

When the liquid is sensed, the transistor is turned on and closed, and the relay is energized and closed;

When no liquid is sensed, the transistor is cut off and disconnected, and the relay does not pull in when it is cut off.

5th. Product selection

serial number	Product number	output method	Outer diameter of clampable water pipe
1	PRO RANGE-Y27C-D3-V	High and low level	The outer diameter of the clampable water pipe is 3mm
2	PRO RANGE-Y27C-D3-NPN	NPN	
3	PRO RANGE-Y27C-D4-V	High and low level	The outer diameter of the clampable water pipe is4mm
4	PRO RANGE-Y27C-D4-NPN	NPN	
5	PRO RANGE -Y27C-D6-V	High and low level	The outer diameter of the clampable water pipe is6mm
6	PRO RANGE -Y27C-D6-NPN	NPN	
7	PRO RANGE -Y27C-D8-V	High and low level	The outer diameter of the clampable water pipe is 8mm
8	PRO RANGE -Y27C-D8-NPN	NPN	
9	PRO RANGE -Y27C-D10-V	High and low level	The outer diameter of the clampable water pipe is 10mm
10	PRO RANGE -Y27C-D10-NPN	NPN	

6th. Structure description

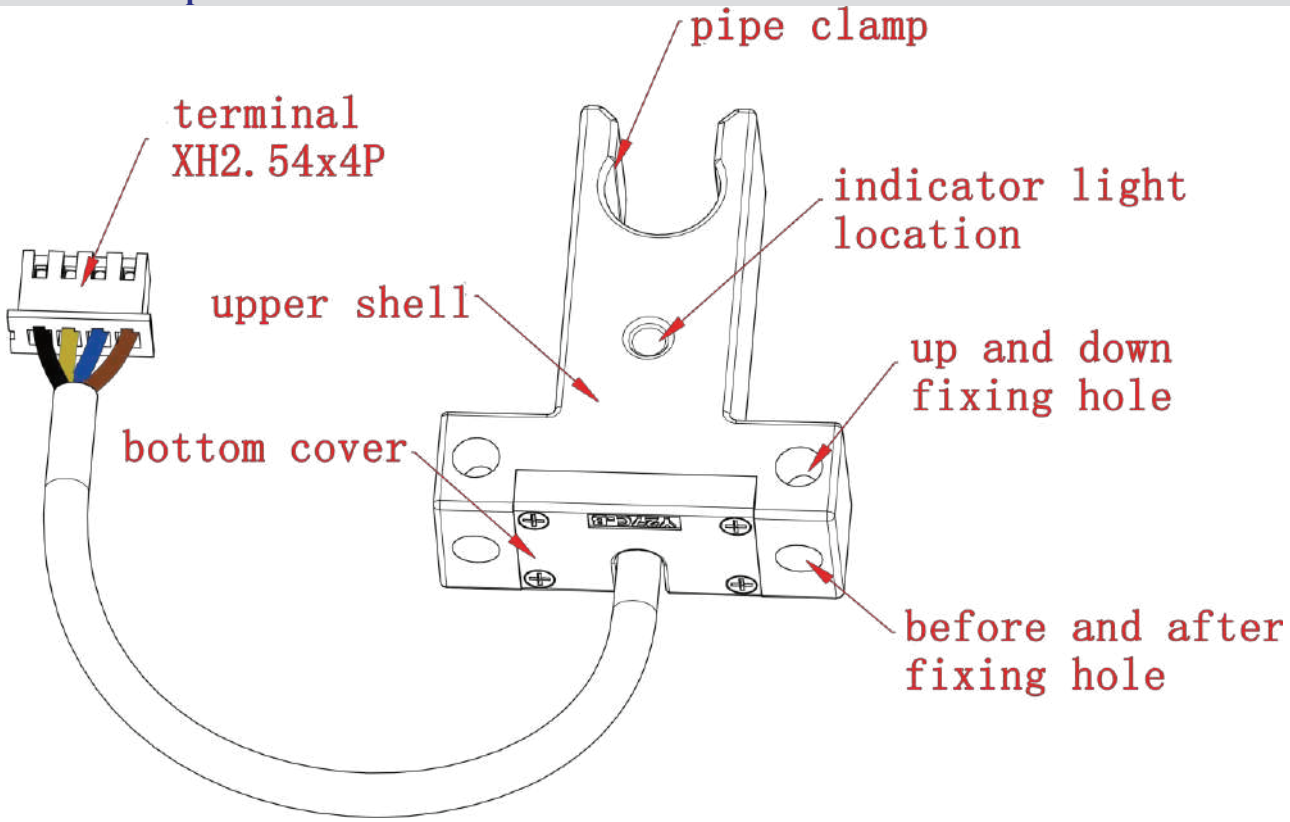

7th. Installation method

Open installation holes on the panel where the sensor needs to be installed, and place the nuts in the upper and lower fixing holes of the sensor or in the front and rear fixing holes to tighten to achieve up and down or front and rear fixing.

8th. Instructions method

When the sensor is working normally, put the liquid pipe into the pipe clamp wire groove. The instruction light is on and the output is high, indicating that there is liquid passing through the current position of the tube. The indicator light is off and the output is low, indicating that no liquid is passing through the current position of the tube.

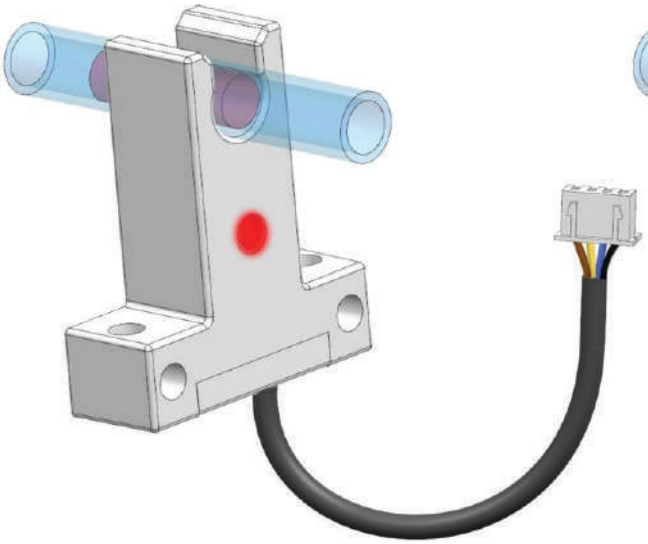

In the picture above, there is liquid in the water pipe at the detection level, and the indicatorlight is on

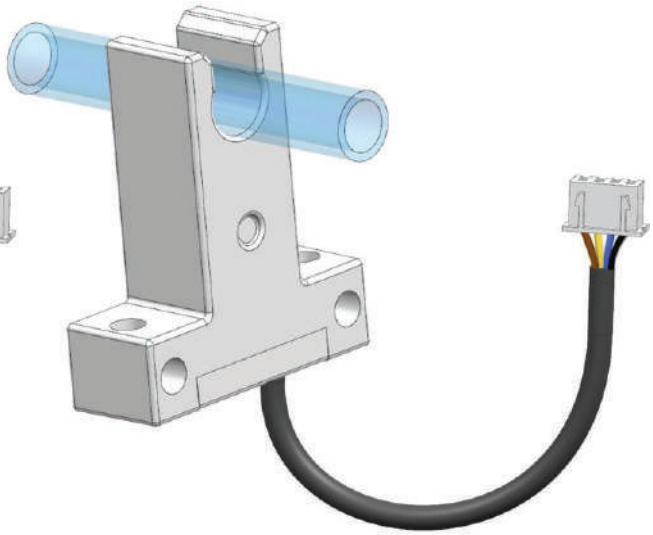

In the picture above, there is no liquid in the water pipe at the detection level, and the indicator light does not light up

9th. Sensitivity setting steps

The sensitivity of the product shall be calibrated in strict accordance with the standard before delivery; However, in the actual use process, it may be necessary to fine tune the accuracy of sensitivity according to the on-site environment to achieve a better experience effect.

1. Connect the sensor circuit as required.
2. Align the liquid level in the liquid pipe with the center of the sensor.
3. Turn on the power supply to power up the sensor.
4. After the mark line of the sensor (sensitivity calibration line) and the sensor and wire are shorted for about 1 second, the mark line is converted from high level to low level, and the LED lamp of the sensor flashes to indicate that the sensor enters the calibration state. After entering the calibration state, the mark line and the and wire are separated, and the calibration is completed successfully when the LED lamp is always on.

Precautions: In normal use, the mark wire of the sensor (sensitivity calibration line) can only be suspended in the air and cannot be connected to the positive or negative pole of the power supply. It is recommended that the sensitivity calibration line be connected to the negative pole (GND) through a switch. When setting the sensitivity, the switch should be closed, and it should be disconnected in normal use.）

10th. Physical shape map

PRO RANGE-Y27C-D3 PRO RANGE-Y27C-D4 PRORANGE-Y27C-D6 PRO RANGE-Y27C-D8 PRO RANGE-Y27C-D10

11th. Installation diagram

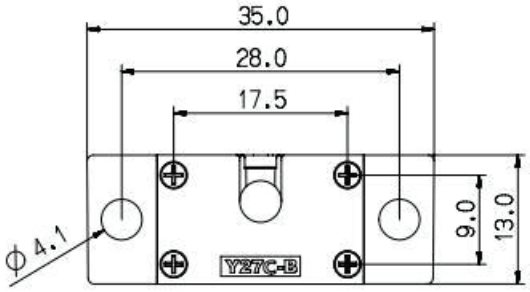

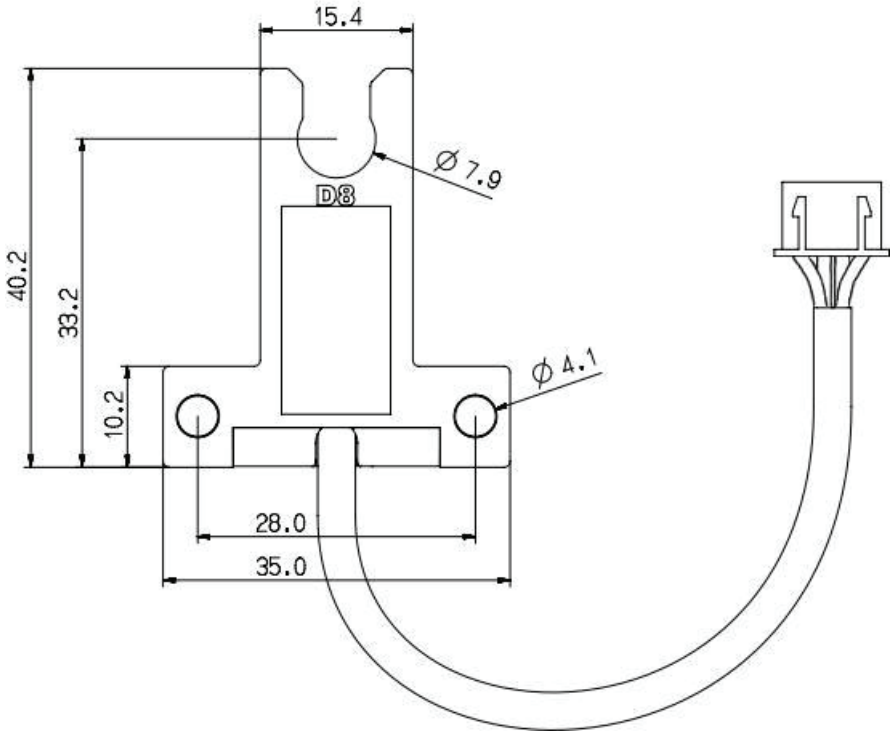

12th. Dimensions related to each model product

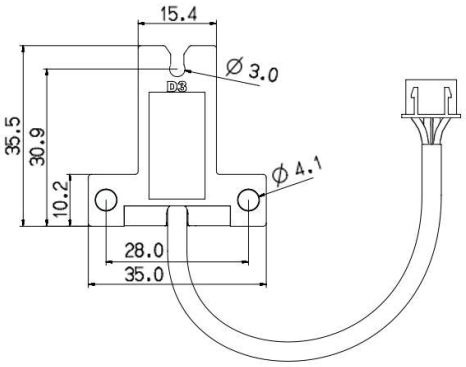

PRO RANGE-Y27C-D3

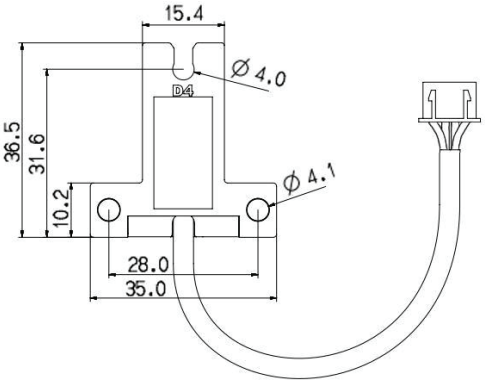

PRO RANGE-Y27C-D4

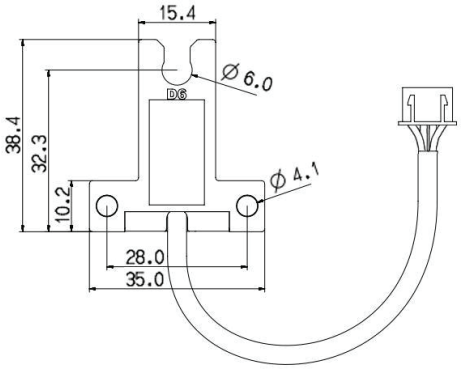

PRO RANGE-Y27C-D6

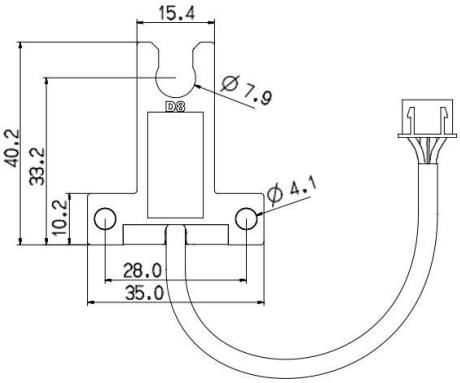

PRO RANGE-Y27C-D8

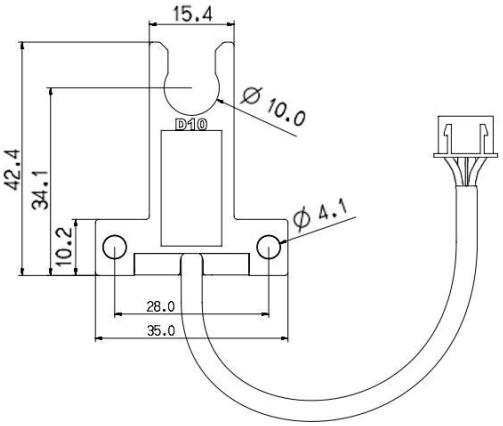

PRO RANGE-Y27C-D10

13th.Precautions

1. The viscosity of the liquid medium to be measured

Normal measurement when dynamic viscosity <10mPaS. 10mPaS < dynamic viscosity < 30mPaS may affect the detection. When the dynamic viscosity is more than 30mPaS, it cannot be measured because a large amount of liquid adheres to the wall of the container.

2. Note: As the temperature increases, the viscosity decreases, and most high-viscosity liquids are more affected by temperature, so pay attention to the effect of liquid temperature when measuring viscous liquids.

3. Pay attention to keep the level gauge clean, try to prevent corrosion and avoid violent collisions and blows from other objects.

4. When installing outdoors, avoid direct sunlight on the main body of the level gauge, keep away from heat sources and pay attention to ventilation. If the ambient temperature exceeds the rated temperature, corresponding cooling protection measures should be taken.

5. When the ambient temperature is too low, the instrument protection box or other protective devices can be used for antifreeze protection, and pay attention to keep the level gauge dry.

6. The sensor should be regularly inspected for maintenance. (The detection time interval is determined by the use unit according to the specific situation).

14th.Product warranty terms and instructions

(A). Warranty service

1. Warranty period maintenance: from the date of purchase, the product host has a one-year free warranty. The company has the right to decide to repair or replace the faulty part. If it is replaced, the replacement part may be a new device or a repair product of the same category, function, and quality. The replaced faulty part belongs to the company; the product Resale and repair do not affect the warranty period. Products that have been repaired or replaced continue to enjoy the original remaining warranty period service. If the warranty period is less than three months after the repair, the repaired or replaced part shall be shipped from the date of delivery Warranty for three months; all products of the company are guaranteed for repair.

2. Loss upon arrival (DOA) replacement: From the day of purchase, you can enjoy a free replacement service within 7 days. Products with the following problems are defined as DOA equipment: the packing and packing list do not match after the first unpacking of the product; some or all of the components cannot be used normally after the first unpacking of the product (surface scratches or other things that do not affect the function of the device) Defects are not included); other hardware failures identified by our company's engineers remotely or locally.

(B). Applicable limitations of warranty

For the following situations, the company does not assume warranty responsibility:

1. The product is out of warranty; the surface of the product is fragile and damaged; the appearance of the product is seriously damaged, installation/use in abnormal environment, unauthorized disassembly and repair/modification, external power supply damage and other abnormal damage;

2. Damage caused by incorrect installation and use of the product by the user not following the requirements of the manual;

3. Damage caused by natural disasters and human negligence (fire, lightning, flooding, impact, etc.).

(C) . Accessories and consumables are not covered by the warranty.

(D) . Non-free warranty service

Within two years of product purchase, for non-warranty product (including components) failures and damages, you can choose paid maintenance services (free labor costs), and we will charge the transportation cost of repairing parts and accessories according to the actual situation.

(E). Ways to obtain warranty service

It is recommended that you contact the dealer who purchased this product to obtain the warranty service. For the warranty, please present a valid warranty card (the dealer's stamp is required to take effect) or the purchase invoice/receipt: if you can't show it, the product's free warranty period 12 months from the product shipment date, and the latest DOA application deadline is 7 days from the product shipment date.

(F). Statement

1. The copyright of this manual belongs to Shenzhen Pro Range Technology Co., Ltd. (Pro Range) and its authorized licensors. Shenzhen Pro Range Technology Co., Ltd. (Pro Range) reserves all rights.

2. Without the written permission of the company, no unit or individual may excerpt or copy part or all of the contents of this manual, and shall not spread it in any form.

3. The customer recognizes that the purpose of the design and production of the company's products does not involve use in products related to life support or other systems or products used in other dangerous activities or environments. Personal injury or death, property or environmental damage due to product failure (collectively referred to as high-risk activities). The company's products are artificially used in high-risk activities, and the company does not guarantee it and is not liable to customers or third parties.

4. Due to product version upgrades or other reasons, the contents of this manual may change. Pro Range reserves the right to modify the contents of this manual without any notice or prompt. This manual is only used as a guide. Pro Range makes every effort to provide accurate information in this manual. However, Pro Range does not guarantee that the contents of the manual are completely free of errors. All statements, information and suggestions in thismanual do not constitute any express or Implied guarantee.

5. Not all models are available in all countries/regions

Please keep this manual properly. Before using the product, please read this manual carefully. When using the product, please be sure to operate in accordance with this manual. The company is not responsible for injuries and accidents caused by operations that do not follow this manual.

(G). Environmental protection This product meets the design requirements for environmental protection. The storage, use and disposal should comply with relevant national laws and regulations. Seek to proceed.

15th. Manual version

Version	Release date
V12	Oct 26, 2022